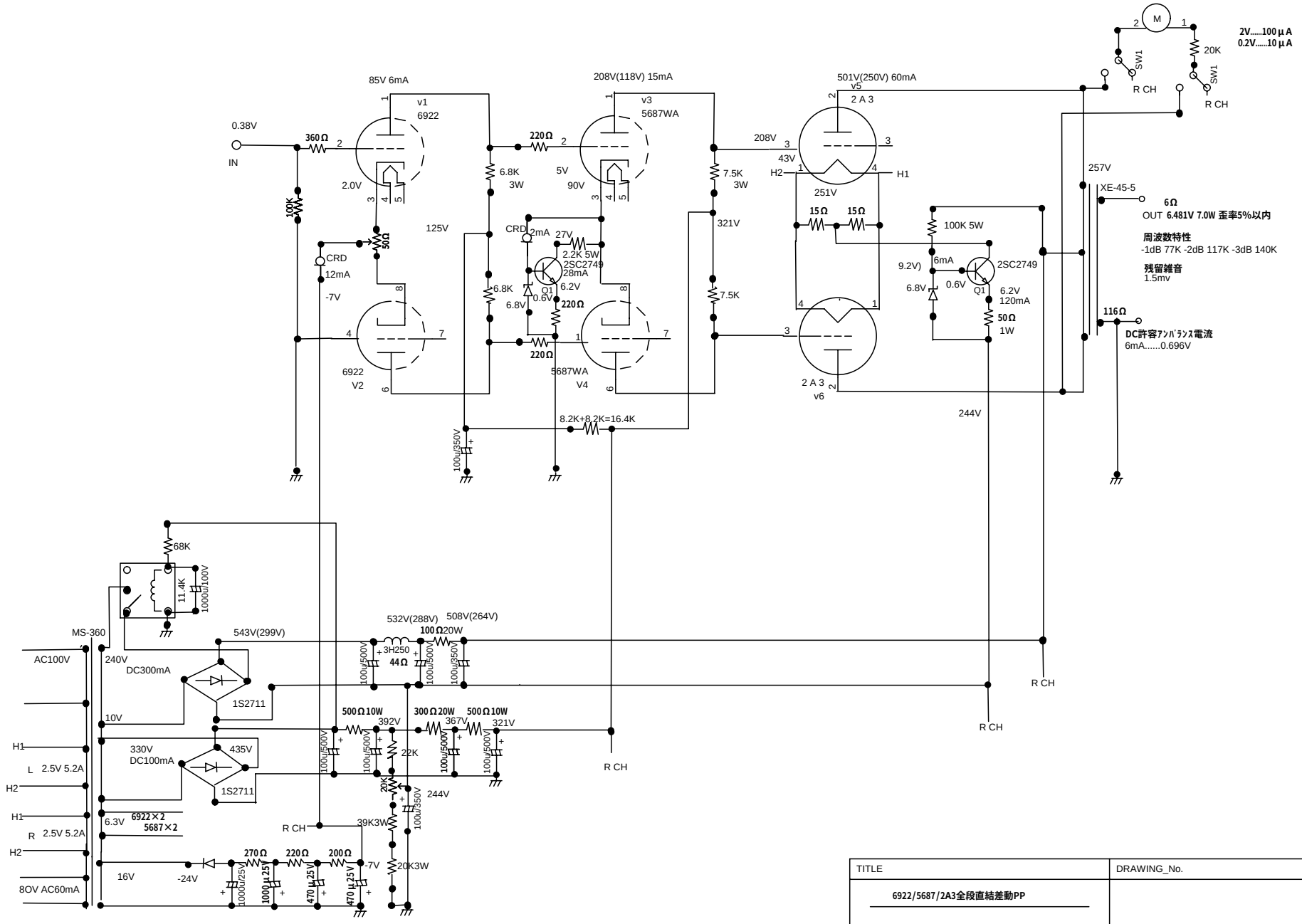

TITLE	DRAWING_No.
6922/5687/2A3全段直結差動PP	

SHEET	DATE	DESIGN
—	2004.10.16	